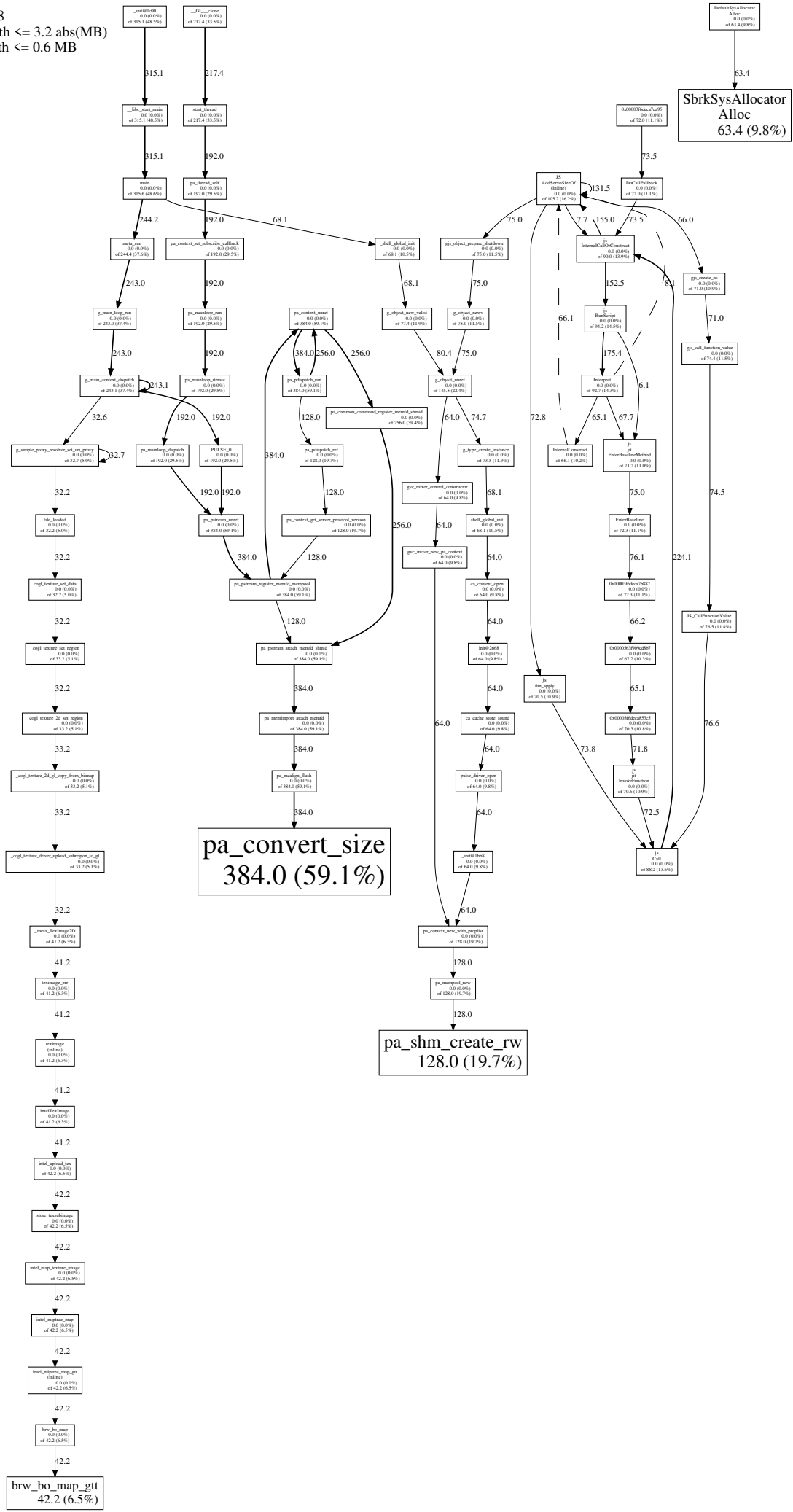/usr/bin/gnome-shell
Total MB: 649.8
Focusing on: 649.8
Dropped nodes with <= 3.2 abs(MB)
Dropped edges with <= 0.6 MB